CCY□7-L LED荧光舱顶灯

CCY□7-L LED Fluorescent Pendant Light

4

应用场所 Application

- 适用于各类平台、船舶一般舱室、内走道、外走道或易碰场所，如轴隧、管道、干货舱、露天甲板等场所。
- Applicable to various platforms, ship general cabins, inner and outer walkway or accessible places, such as shaft tunnels, pipes, dry cargo warehouse, open deck and other places.

型号含义 Catalogue Number Logic

CCY □ 7 – L □ □ □

- S: 不锈钢(钢不注) Stainless steel (no need to note for steel)
- F: 带防护网 With shield
- E: 集中电源 Centralized power
- ZE: 自带电源 Self contained power
- 灯管数量 Lamp tube number
- 设计序号 Design No.
- 功率 Power 2: 20W 4: 40W
- 船用荧光舱顶灯 Marine fluorescent pendant light

配光性能 Photometric data

cd/1000lm

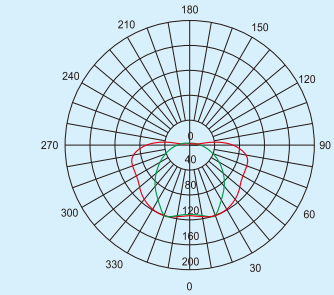

CCY□7-L LED荧光舱顶灯
CCY□7-L LED Fluorescent Pendant Light

技术参数 Technical parameters

◆ 执行标准 **Compliance**	CCS入级规范 (CCS standard)
◆ 产品外壳 **Enclosure**	采用优质钢板或不锈钢拉伸成型，透明罩采用聚碳酸脂材质，透光率高，防撞击 Enclosure is stretching formed, of high quality steel plate or stainless steel, with polycarbonate transparent cover, with high reflection efficiency and of good impact resistant performance
◆ 控制电器 **Control equipment**	恒流恒压电源，宽电压输入，恒功率输出，具有恒流、开路、短路等保护功能。 Constant current constant voltage power supply, wide voltage input, constant power output, with functions of constant current, open circuit, short circuit protection.
◆ 额定电压 **Rated voltage**	110V/60Hz 220V/50Hz 220V/60Hz
◆ 额定功率 **Rated power**	
光源类型 Light source	LED
灯具功率 Power of lamp	20W 40W
◆ 防护等级 **Degree of protection**	IP66 / IP67
◆ 防腐等级 **Corrosion-proof**	WF2
◆ 温度范围 **Temperature range**	−40℃~+55℃
◆ 自带电源型应急参数 **Data for lamp with self-contained power source**	
应急启动时间 Emergency start time	0.3s
应急照明时间 Emergency lighting time	90min
应急功率 Emergency power	20W 40W
充电时间 Charge time	24h
◆ 集中电源型应急参数 **Data for lamp with centralized power source**	应急功率LED 3W，用于24V应急照明，灯罩边缘标有红色“●”标志 Emergency power LED 3W, suitable for 24V emergency lighting, the edge of lampshade is with red marking “●”

选配表及外形尺寸 Selection table and outline dimension
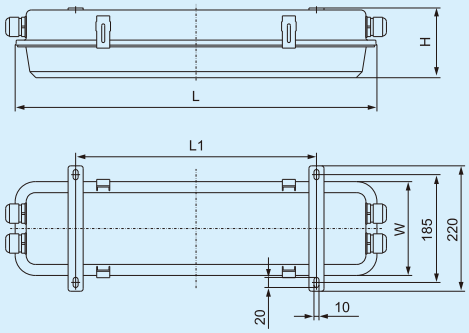
型 号 Type	功率(W) Power	重量(kg) Weight	安装尺寸 Size			
			L	L1	W	H
CCY27-2	20	5.9	680	480	150	124
CCY27-2F	20	5.9				142
CCY27-2E	20	5.9				124
CCY47-2	40	6.5	721	480	185	140
CCY47-2F	40	6.5	1342	700	185	158
CCY47-2E	40	6.5				140
CCY47-2ZE	40	6.5				140